Art No	Description
88888-993	SP- Österlen Sofa Table - Screw set
88888-994	SP - Österlen Sofa Table - Plastic Feet
88888-995	SP - Österlen Sofa Table - Glass Top

furniture/fashion
Design by Daniel Johansson & Laila Bagge

VENTURE DESIGN
HOME & INTERIOR

15003-331

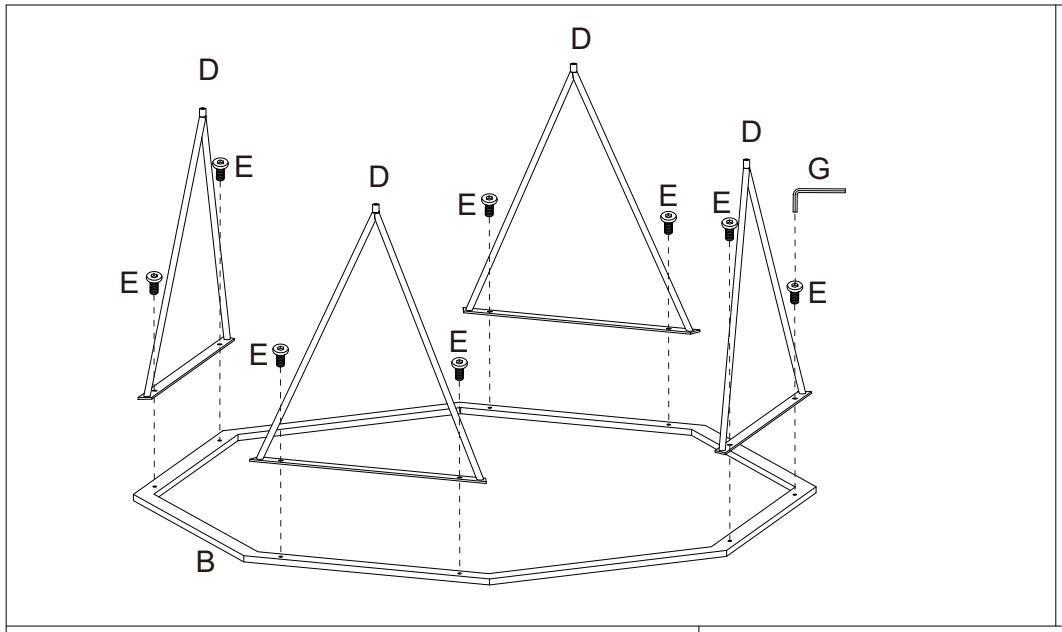

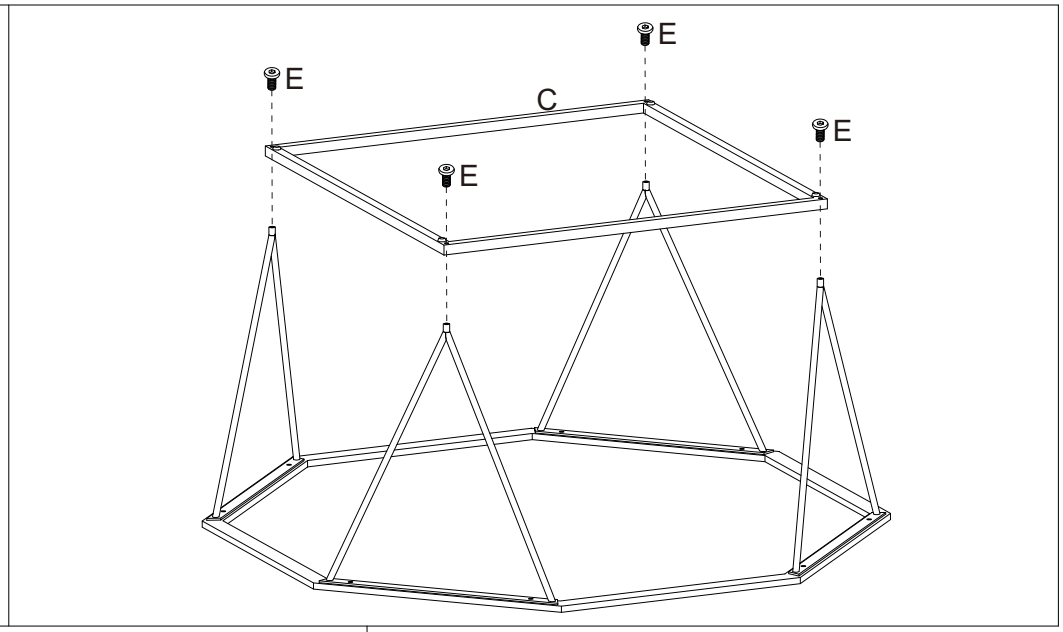

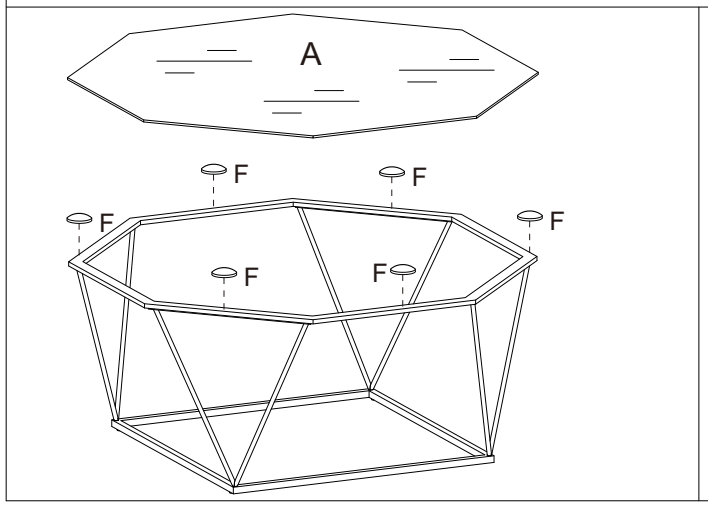

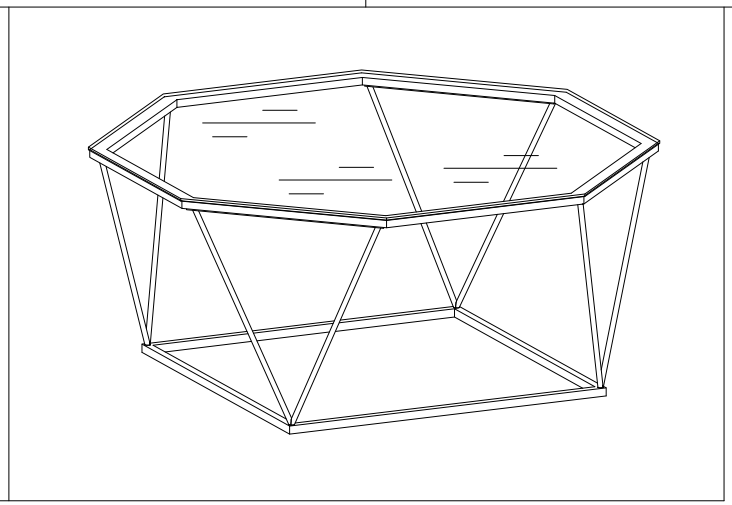

A		1	88888-995
B		1	
C		1	
D		4	
E		12	88888-993
F		6	88888-993
G		1	88888-993